SINGLE PHASE – TRANSFORMER–RATED

TWO WIRE SERVICE
TWO WIRE METER
1–2 WIRE CT

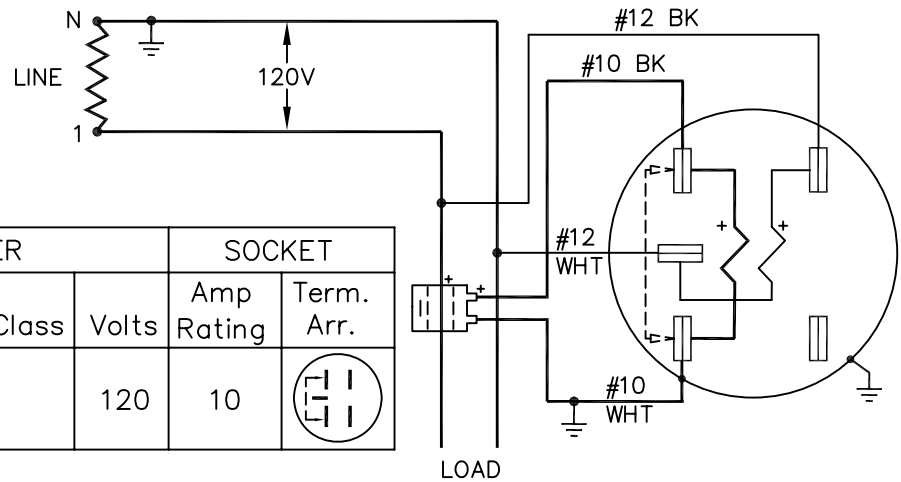

SERVICE	2 WIRE	METER				SOCKET	
Approx. Load	Amps Per Line	Type	Form	Class	Volts	Amp Rating	Term. Arr.
		N/A	3S		120	10	

DIAGRAM 7

THREE WIRE SERVICE
TWO WIRE METER
1–3 WIRE CT

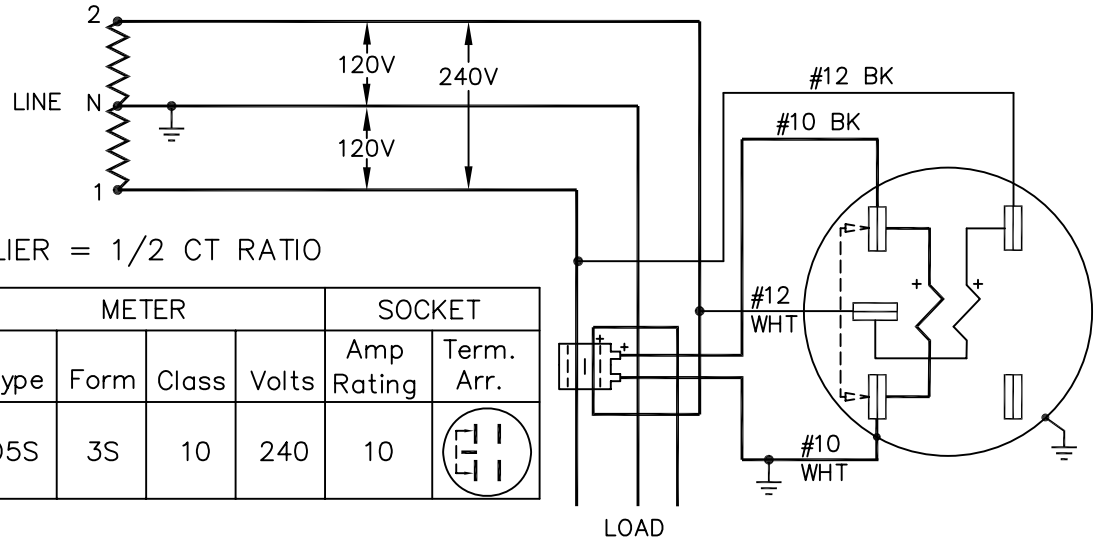

METER MULTIPLIER = 1/2 CT RATIO

SERVICE	3 WIRE	METER				SOCKET	
Approx. Load	Amps Per Line	Type	Form	Class	Volts	Amp Rating	Term. Arr.
		D5S	3S	10	240	10	

DIAGRAM 8

BIG BEND ELECTRIC COOP, INC.
RITZVILLE, WA

Drawn By:	*D. HITTLE & ASSOC.*	Date: *8/13/93* Rev: *4/14/04*
Approved By:	*D.R.B.*	Date: *4/14/04*

DIAGRAMS 7 & 8